COMPENG 2DX3 Project Report

Maarvi Fayyaz - 400595437

Date Due: April 7, 2026

As a future member of the engineering profession, the student is responsible for performing the required work in an honest manner, without plagiarism and cheating. Submitting this work with my name and student number is a statement and understanding that this work is our own and adheres to the Academic Integrity Policy of McMaster University and the Code of Conduct of the Professional Engineers of Ontario.

Table of Contents

Device Overview **3**
- **Features** 3
- **General Description** 4
- **Block Diagram** 5

Device Characteristics Table **6**

Detailed Description **7**
- **Distance Measurement** 7
- **Visualization** 8

Application Note, Instructions, and Expected Output **11**
- **System Setup** 11
- **Operating Instructions** 12

Expected Results **13**

Limitations **15**

Circuit Schematic **16**

Programming Logic Flowchart **17**

Device Overview

Features

The implemented spatial mapping system operates with a system bus speed of 32 MHz, which is configured according to the student-specific requirement. The system is powered through the TM4C1294 development board using a standard USB supply, resulting in an operating voltage of approximately 3.3 V for logic-level components, with onboard regulation ensuring stable operation of the microcontroller and peripherals.

The system utilizes a VL53L1X Time-of-Flight (ToF) sensor to perform distance measurements with millimeter-level precision. Communication between the sensor and the microcontroller is achieved using the I2C protocol, with PB2 configured as the serial clock (SCL) and PB3 as the serial data (SDA) line. Processed data is transmitted to a personal computer using UART serial communication at a baud rate of 115200 bits per second, enabling reliable real-time data transfer.

On the receiver side, MATLAB is used as the primary programming environment for data acquisition, processing, and visualization. The MATLAB script reads incoming serial data, parses measurement values, converts them into Cartesian coordinates, and generates three-dimensional plots to reconstruct the scanned environment.

The microcontroller used in this system, the TM4C1294NCPDT, provides sufficient computational capability and memory resources for the application. It includes 1 MB of flash memory for program storage and 256 KB of SRAM for data handling, which is more than adequate for managing sensor communication, motor control, and UART transmission in this project.

The system also incorporates a stepper motor for 360° rotational scanning, controlled via GPIO pins, and uses LED indicators to provide real-time feedback on measurement activity and data transmission. A push-button interface allows the user to initiate the scanning process.

In terms of cost, the system is designed to be low-cost and accessible, with the primary components, including the ToF sensor, stepper motor, and development board, collectively costing significantly less than commercial LiDAR systems, while still demonstrating key spatial mapping capabilities.

General Description

This, project, describes a design and implementation of embedded spatial mapping system that can reconstruct three-dimensional map of an indoor environment. This module is ToF sensor-based, which makes distance estimations by sending infrared light and timing how long it takes for the returned signal to reach the sensor. This method makes non-contact distance measurements in real time and with great accuracy.

The ToF sensor is mounted on a stepper motor that can rotate in discrete angular steps and accomplish a full 360° scan in a vertical plane, namely y-z plane. Each angular position provides one distance measurement, which altogether represents the scenario. For three-dimensional data set generation, the whole system is displaced manually along the x-axis at predetermined intervals. Together with the linear displacement, this provides for a spatial information acquisition system on all three axes.

The microcontroller stands as the center processing unit of the entire system, controlling sensor functions, motorizing the system, and relaying information. Measurements for distance are obtained from the ToF sensor through the I2C communication protocol. They are then converted to Cartesian coordinates by trigonometric relations to find a spatial point in three-dimensional space. The data acquired is sent to a personal computer by means of UART communication.

On a computer, for the visualization of the transmitted data, MATLAB is used. This data can be plotted as a 3-D scatter plot or can be shown as connected scan planes to give a better view of the scanned environment. Hallways with walls, doors, and other features can be built using the information obtained through scanning.

To improve usability and system monitoring, the design makes use of various led indicators that ensure feedback is given at every moment of operation. A push button interface is also provided for the user to initiate the scan function. The overall system shows a sensing-processing-communication-visualization data acquisition pipeline in a compact and low-budget design.

Block Diagram

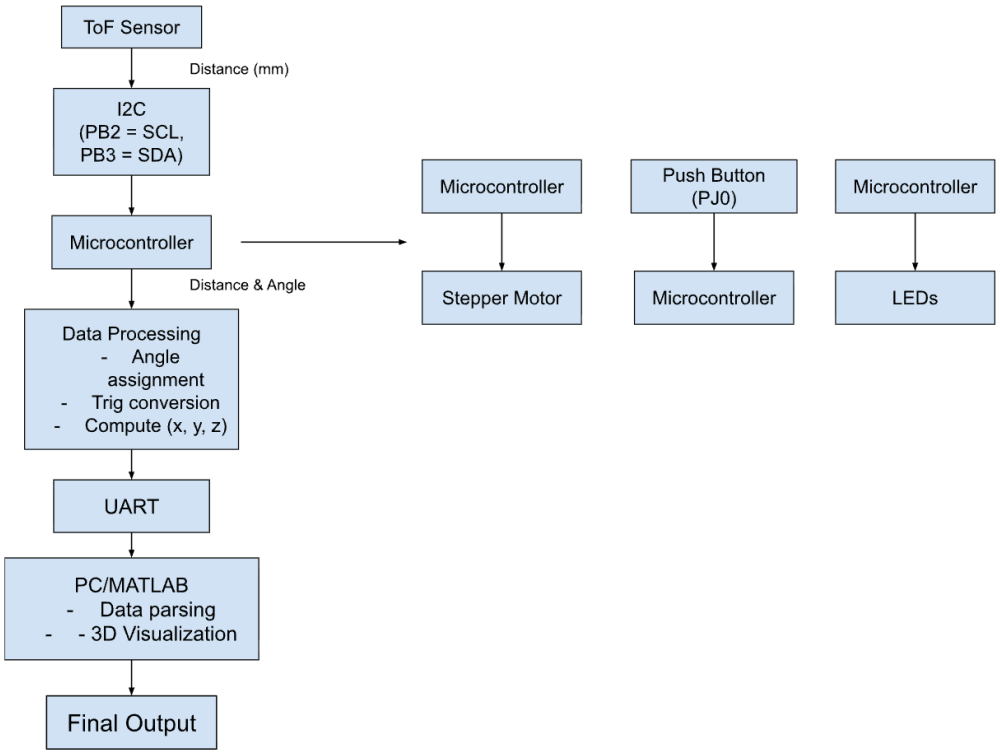

Device Characteristics Table

Parameter	Description
Microcontroller	TM4C1294NCPDT
System Bus Speed	32 MHz (Student number ends in 7)
Sensor Type	VL53L1X Time-of-Flight
Measurement Range	Up to 4m
Measurement Resolution	Millimeter level precision
Measurement Type	Optical (infrared time-of-flight)
Communication (Sensor)	I2C (PB2 = SCL, PB3 = SDA)
Communication (PC)	UART via XDS110 interface
UART Baud Rate	115200 bps
Scan Type	360° rotational scanning
Angular Resolution	11.25° per step (32 steps per rotation)
Displacement Method	Manual (simulated 10cm intervals for demo)
Number of Scans	16 scans (for 3D reconstruction)
Coordinate System	Cartesian (x, y, z)
Data Output Format	Serial transmission of (x, y, z) coordinates
Stepper Motor Control	GPIO (PL0 – PL3)
User Input	Push-button (PJ0)
Measurement Status LED	PF4
UART Transmission LED	PN1
Additional Status LED	PN0
Processing Method	Polling based data acquisition
Visualization Platform	MATLAB (3D scatter plot)
Power Supply	USB-powered development board

Detailed Description

Distance Measurement

Distance measurement in this system is done via the VL53L1X time of flight (ToF) sensors which calculate the distances from surrounding objects by measuring the time taken by an emitted infrared light to reach an object and reflect to the sensor. Unlike traditional ultrasonic sensors that use sound waves, the ToF sensor employs light-based measurements instead, which provide faster and more precise responses.

The VL53L1X sensor consists of an infrared emitter and a very sensitive receiver array of Single Photon Avalanche Diodes (SPAD). The emitter produces short infrared light pulses that travel through the surroundings during the measurement process. It is then sent back to the sensor for analysis. The receiver does full photon detection and stores latency between the emission and detection procedures. Again, using the known speed of light, the sensor determines the distance to the object based on the travel time.

The distance determination is done based on the relationship: $d = \frac{ct}{2}$, where distance measured is denoted as d, the speed of light is c, and the time measured interval is t. The factor of one-half is related to the round-trip of the light signal.

ToF sensor communication with the microcontroller uses the I2C protocol, with PB2 designated as serial clock (SCL), and PB3 as the serial data (SDA) line. The microcontroller initiates communication with the sensor by sending configuration and control commands, after which it polls the sensor to know when there is new measurement data. Therefore, a polling approach is adopted such that only when the updated measurement is ready, will the measurement be taken, thus competent results are always guaranteed.

Once the indication that the data is ready comes from the sensor, the microcontroller gets several measurement parameters, which are distance, signal rate, ambient rate, and range status. According to the measurement parameters passed to the microcontroller, the major parameter to use for spatial mapping is the distance value. The signal rate is the strength of the returned signal, while the ambient rate is background light interference. These parameters may be used for crosschecking the quality and reliability of the measurement data.

To enable full spatial coverage, the ToF sensor is mounted on a stepper motor, which rotates the sensor in angular increments. In this implementation, the motor operates using 45° steps, which produces eight measurement positions for the full 360° scan. The coil controlling signals have been designed such that the GPIO pins PL0-PL3 produce the necessary sequence to

energize these coils, causing rotational movement. Delay is introduced between steps to allow for stable motion and accurate positioning.

The distance measurement is done at every angular position, and the value is paired with the corresponding angle. Distance measurement is performed at each angular position and associated with the angle, therefore producing a set of polar coordinates (r, θ), where r is the measured distance and θ is the angular position of the sensor. To stretch these polar coordinates into three dimensions, several attempts are made by moving the system at a constant displacement in the x-axis. Three scans are performed in this project, and a fixed offset of 10 cm is assigned for each scan along the x-axis. This, therefore, makes it possible for the system to create a volumetric space from the environment without any form of translation in the demonstration phase.

To provide real-time feedback during measurement, an LED connected to PF4 is lit up whenever a distance reading is acquired. This is to let the user know that the system is working on data collection. Also, UART transmission events are denoted by connecting an LED on PN1, and the other status LED on PN0 is used to indicate specific states by the system such as waiting for the user input or declaration of completed scanning.

Overall, the distance measurement subsystem uses optical sensing, digital communication, and motor control to perform accurate measures that determine spatial data at all angles. Their integration makes it possible for the system to obtain the required geometry of the surrounding area.

Visualization

This project will generate a 3D visualization of the scanned environment, after having received the scan data over UART, and had it converted into Cartesian coordinates, indexed by scan.m and angle. The visualization application on the PC side of the project is MATLAB, which will handle acquisition of serial data from the microcontroller as well as graphical reconstruction of the scan data in a 3D environment.

MATLAB will open a serial connection to the microcontroller at a baud rate of 115200 bps; then set a timeout to avoid waiting forever for data; and then configure the carriage return/line feed terminator for each UART message read to allow for complete lines of incoming data. After the serial buffer has been flushed, the application will wait for scan data to be transmitted from the embedded system.

When scan data transmission occurs, the UART data will be read from the serial port's input buffer one complete line at a time using the readline() function. The expected format of a complete line of UART scan data information consists of six values, including: the angle index, measured distance, range status, signal rate, ambient rate, and total number of SPAD counts. The MATLAB script parses each received line using sscanf, which extracts the numerical values from the comma-separated string. Only lines containing all six expected values are accepted as valid measurements. This ensures that incomplete or malformed serial data does not affect the final visualization.

For each valid point, the script uses the angle index and measured distance to compute the corresponding spatial coordinates. The raw distance value sent by the microcontroller is converted from millimeters to centimeters by dividing by 10. The angular position is then determined from the angle number using the total number of points per scan. Since each full scan contains 32 angular samples, the angle for each point is calculated as

$$\theta = (angleNum - 1)\left(\frac{2\pi}{pointsPerScan}\right)$$

This evenly distributes the measured points over a full 360° rotation. The radial distance and angular position are then converted into Cartesian coordinates in the y–z plane using the relationships

$$y = rcos(\theta), \qquad z = rsin(\theta)$$

where r is the measured distance in centimeters. The x-coordinate is assigned according to the scan number. In the MATLAB script, the spacing between scans is intentionally exaggerated to 30 cm for improved visual separation in the final plot. Thus, the x-coordinate is computed as

$$x = (scan - 1)\ x\ 30$$

This means that each complete scan corresponds to one vertical scan plane located at a different x-position.

As the data is processed, the computed x, y, and z coordinates are stored in arrays. Additional arrays are also used to store the scan index and angle index for each point. These extra arrays are important because they allow the program to later group points belonging to the same scan and order them correctly around the ring based on angular position. During acquisition, the program also prints each point to the MATLAB command window, which provides immediate confirmation that valid points are being received and converted correctly.

After all scans have been collected, the serial port is closed, and the plotting stage begins. Two different 3D visualizations are generated to show the scanned environment from complementary perspectives. The first plot is a 3D scatter plot created using scatter3. In this plot, each measured point is displayed individually in three-dimensional space, and the points are

colored according to scan number. This provides a clear point cloud representation of the collected data and allows the user to observe the overall spatial distribution of points.

The second plot provides a more structured geometric view of the same data. In this visualization, points belonging to the same scan are grouped together, sorted by angle index, and connected sequentially using plot3 to form closed rings or scan planes. The first point of each ring is repeated at the end so that the scan loop closes visually. In addition, corresponding angular points from adjacent scans relate to gray line segments. This creates a connected multi-scan structure that more clearly illustrates the relationship between successive scan planes and improves the user's ability to interpret the three-dimensional shape of the environment.

The use of both the scatter plot and the connected scan-plane plot strengthens the visualization process. The scatter plot emphasizes the raw measurement distribution, while the connected plot makes the underlying structure of the environment easier to recognize. Together, these plots provide an effective reconstruction of the scanned space and demonstrate that the system successfully transforms UART-transmitted measurement data into a usable three-dimensional model.

Overall, the visualization stage plays a critical role in the project by converting incoming serial data into a meaningful graphical representation. The MATLAB implementation not only receives and parses scan data, but also performs coordinate conversion, organizes points by scan and angle, and generates two complementary 3D views of the environment. This confirms that the system can complete the full pipeline from sensing and transmission to spatial reconstruction and interpretation.

Application Note, Instructions, and Expected Output

System Setup

To set up and use the spatial mapping system, the hardware components (TM4C1294 microcontroller, VL53L1X ToF sensor, stepper motor, LEDs, and push-button) need to be assembled and installed correctly. The stepper motor rotates with the ToF sensor mounted on its shaft, allowing for to rotate while scanning.

The microcontroller and associated electronics are mounted in a small enclosure to help provide dimensional stability and to provide consistent measurements. The phase was performed by housing the microcontroller and related wiring in an enclosure (box) with an opening (circular) cut out of the side of the box for the stepper motor shaft and sensor to extend out of the box; the sensor can now see without obstruction, while the electronic components remain secure and stable.

The entire setup is then placed on a chair to elevate the system and align the sensor approximately with the mid-height of the surrounding environment. Elevating the system improves measurement coverage and reduces interference from the floor. During operation, the chair is manually repositioned to simulate displacement along the x-axis. This displacement is required to generate multiple scan planes for three-dimensional reconstruction.

All electrical connections must be verified prior to operation. The ToF sensor is connected to the microcontroller via the I2C interface using PB2 (SCL) and PB3 (SDA). The stepper motor is connected to GPIO pins PL0–PL3, which control the motor coil sequencing. LED indicators are connected to PF4 (measurement), PN1 (UART transmission), and PN0 (system status). A push-button connected to PJ0 is used to initiate the scanning process. The system is powered through the USB connection to the development board, which also provides the UART communication interface via the onboard XDS110 module.

On the software side, the microcontroller must be programmed with the final embedded code, and the MATLAB script must be configured with the correct serial port and baud rate (115200 bps). The MATLAB script should be ready to run before beginning the scan process.

Operating Instructions

Once the system has been properly assembled and configured, the following steps should be followed to perform a complete scan and generate a three-dimensional model:

1. Connect the microcontroller to the computer using a USB cable and ensure that the correct serial port is selected in the MATLAB script.
2. Run the MATLAB script to initialize the serial connection and prepare the system for incoming data. The script will display a message indicating that it is waiting for scan data.
3. Position the system at the desired starting location within the environment to be scanned (e.g., a hallway). Ensure that the sensor has a clear, unobstructed view of the surroundings.
4. Press the push-button (PJ0) on the microcontroller to begin the first scan. The stepper motor will rotate the ToF sensor through a full 360° sweep, collecting distance measurements at discrete angular intervals. LED indicators will provide feedback during operation, with PF4 indicating measurement activity and PN1 indicating UART transmission.
5. After the first scan is complete, manually move the entire setup (box and chair) forward by a fixed distance along the x-axis. In this implementation, the displacement is approximated manually to simulate evenly spaced scan positions.
6. Press the push-button again to initiate the next scan. The MATLAB script will continue recording data for the new scan while associating it with a different x-position.
7. Repeat the displacement and scanning process for the desired number of scans.
8. Once all scans are complete, allow the MATLAB script to finish processing and automatically generate the 3D visualization.

It is important to maintain consistent displacement between scans to ensure that the reconstructed model accurately represents the environment. Additionally, the system should remain stable during each scan to avoid introducing measurement errors.

Expected Results

Figure 1: Location photograph

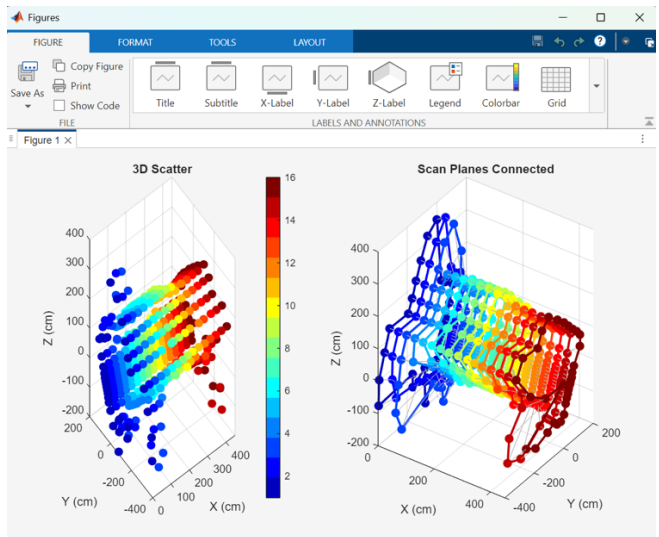

Figure 2: 3D model

The expected output of the system is a three-dimensional reconstruction of the scanned environment, generated from the collected distance measurements. The MATLAB script produces two primary visualizations: a 3D scatter plot and a connected scan-plane representation.

The 3D scatter plot displays each measured point as an individual marker in space, providing a point cloud representation of the environment. Points are typically color-coded based on the scan index, allowing the user to distinguish between different scan planes along the x-axis. This visualization highlights the overall distribution of measured points and provides insight into the density and coverage of the scan.

The connected scan-plane visualization provides a more structured representation of the same data. In this plot, points belonging to each scan are connected sequentially to form closed loops, representing individual cross-sectional slices of the environment. Additionally, corresponding points from adjacent scans are connected, creating a mesh-like structure that improves the perception of depth and continuity. This representation makes it easier to identify physical features such as walls, corners, and open spaces.

The reconstructed model should closely resemble the actual environment being scanned. For example, when scanning a hallway, the resulting visualization should show two roughly parallel surfaces corresponding to the walls, along with variations that represent doors, openings, or other structural features.

Limitations

While the implemented spatial mapping system successfully reconstructs a three-dimensional representation of an indoor environment, several limitations affect its accuracy and overall performance.

One major limitation is the use of manual displacement between scans. In this setup, the system is moved by repositioning the box and chair to simulate movement along the x-axis. Since this displacement is not precisely controlled, inconsistencies in spacing can occur, leading to distortion in the final 3D model.

Another limitation is the low angular resolution of the scan. The stepper motor rotates in 45° increments, resulting in only eight measurement points per full rotation. This produces a relatively sparse point cloud, which reduces the level of detail captured and makes it difficult to represent smaller features accurately.

The ToF sensor is also affected by surface properties and environmental conditions. Reflective, dark, or transparent surfaces can introduce measurement errors, while ambient light may interfere with sensor readings. Additionally, measurement noise can cause small variations in distance values, leading to minor inconsistencies in the visualization.

Mechanical limitations of the stepper motor can also impact accuracy. Slight misalignment or positioning errors may affect the exact angle of each measurement, which can accumulate over a full scan.

Finally, the system uses a polling-based approach for data acquisition, which is less efficient than interrupt-based methods and may limit performance. Despite these limitations, the system effectively demonstrates the core principles of 3D spatial mapping and provides a reasonable approximation of the scanned environment.

Circuit Schematic

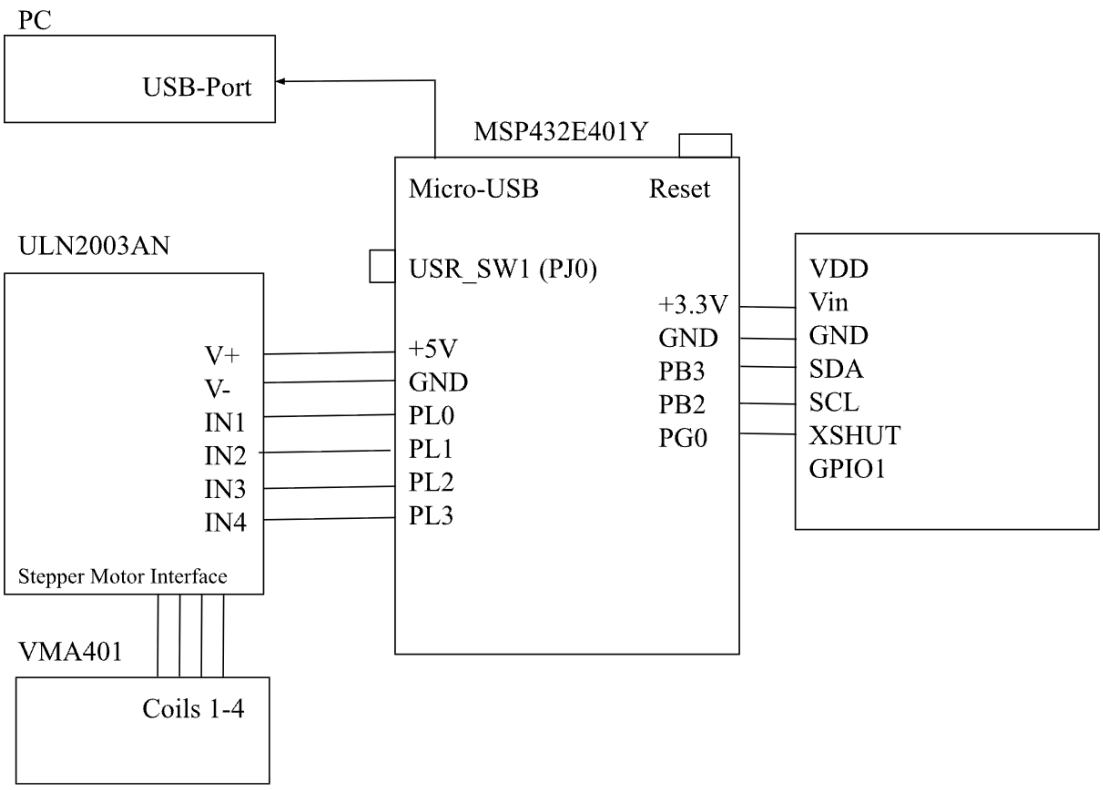

Figure 3: Circuit schematic for spatial mapping system
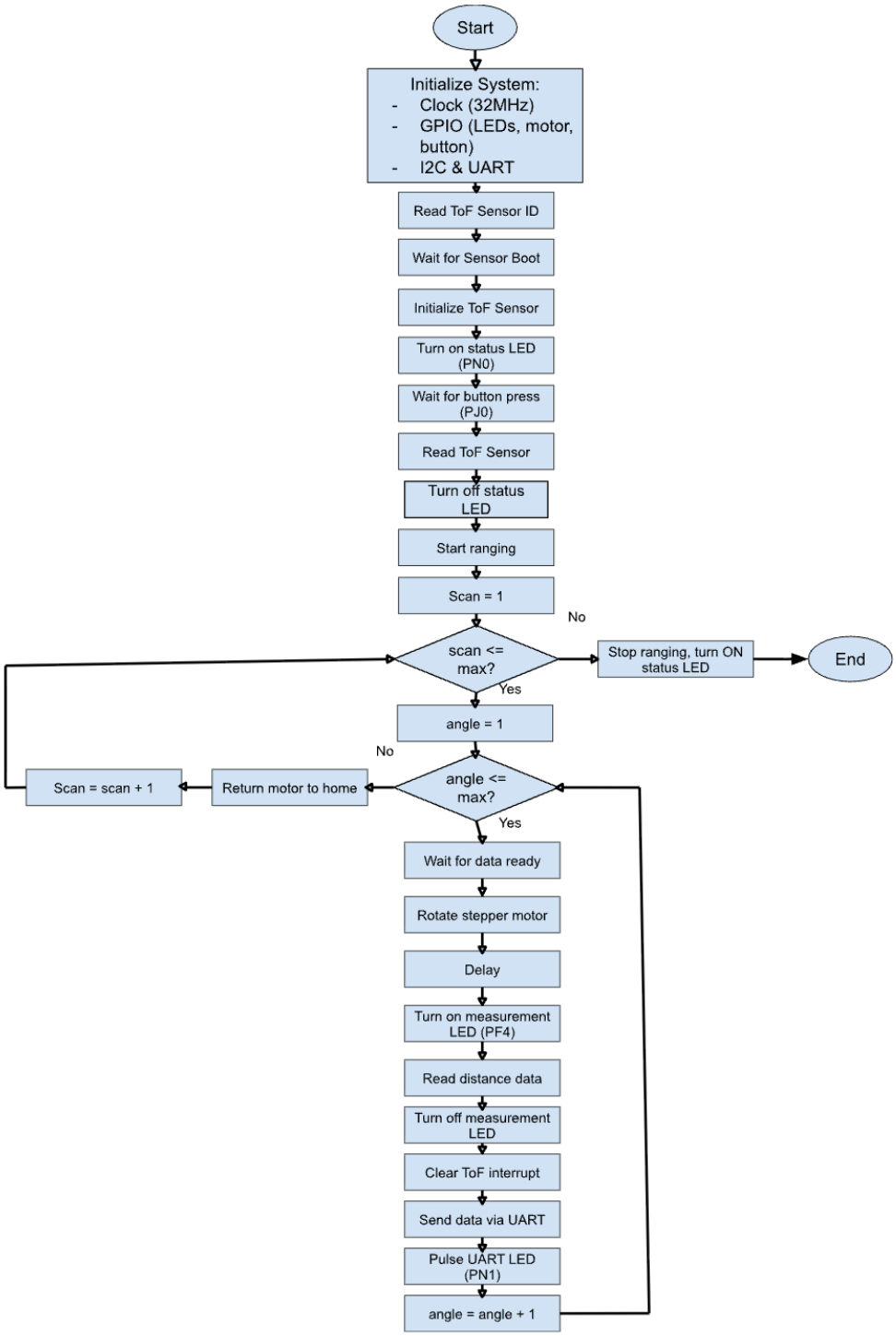
Programming Logic Flowchart